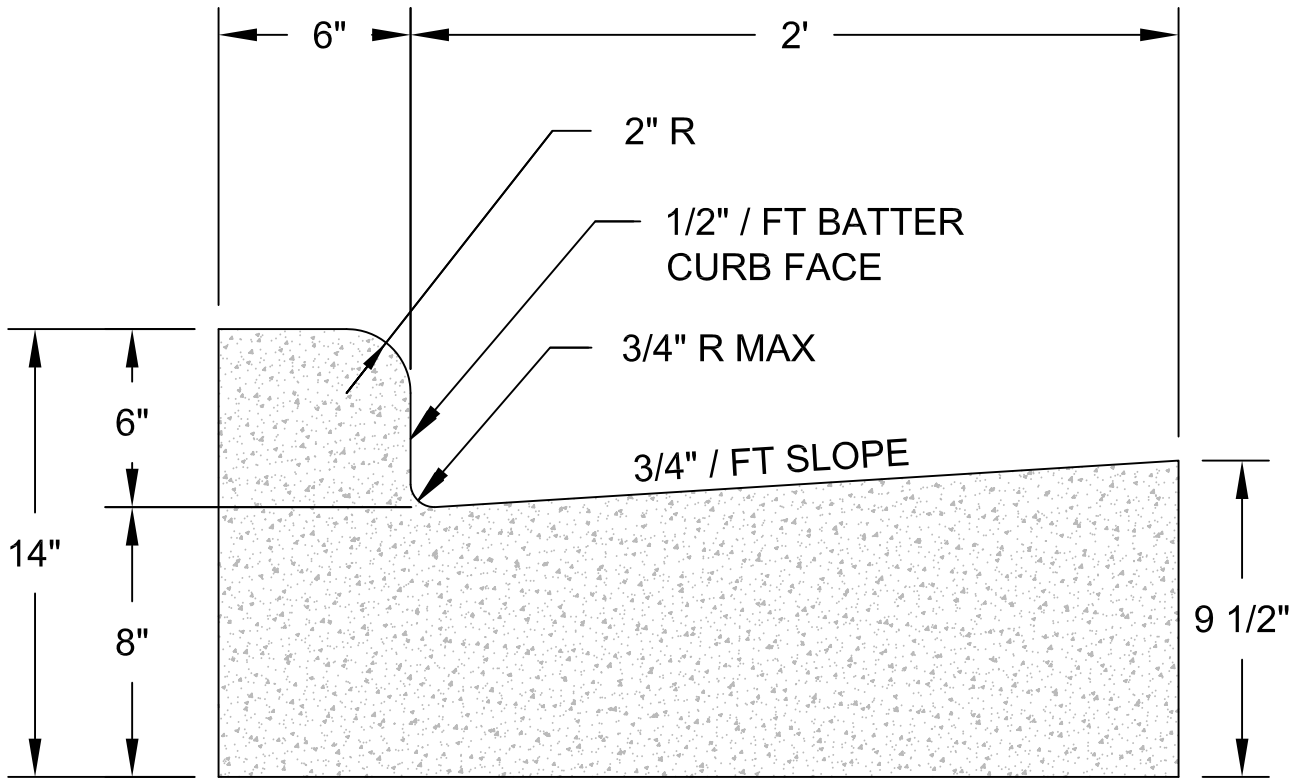

FIGURE NO. 6

CONCRETE
CURB AND GUTTER 30-INCH

CITY OF NEW BERLIN
ENGINEERING DEPARTMENT

DRAWN BY:	DATE:	SCALE:
JMS/NLH	2/01, REV 5/16	NTS

P:\DCD\Projects\DCD1 DCD STUDY_PLAN\DCD1 1601034 DEVELOPMENT HANDBOOK\Development Handbook Revisions 2016\07_02 DETAILS\fig-06_CG_Vertical.dwg